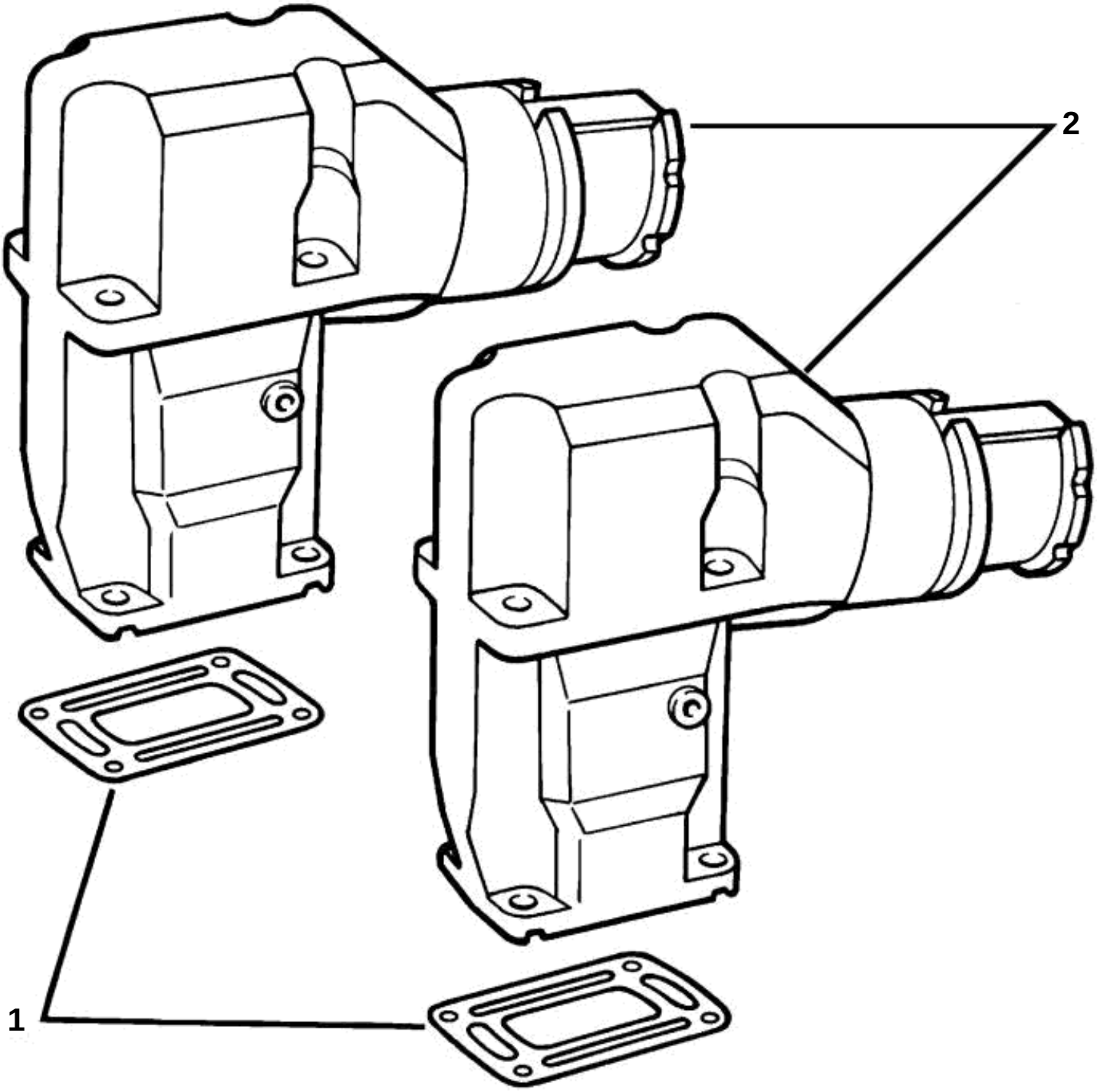
2
1

EXHAUST RISER KIT

REF	PART NO.	QTY	DESCRIPTION
	3856484	1	Exhaust riser
1	3850496	2	· Gasket
2	3856259	2	· Exhaust riser